baseband

File: baseband.kicad_sch

MCU

File: MCU.kicad_sch

Sheet: /
File: k_lc7.kicad_sch

Title:

Size: A4	Date:	**Rev:**
KiCad E.D.A. 10.0.0		Id: 1/3

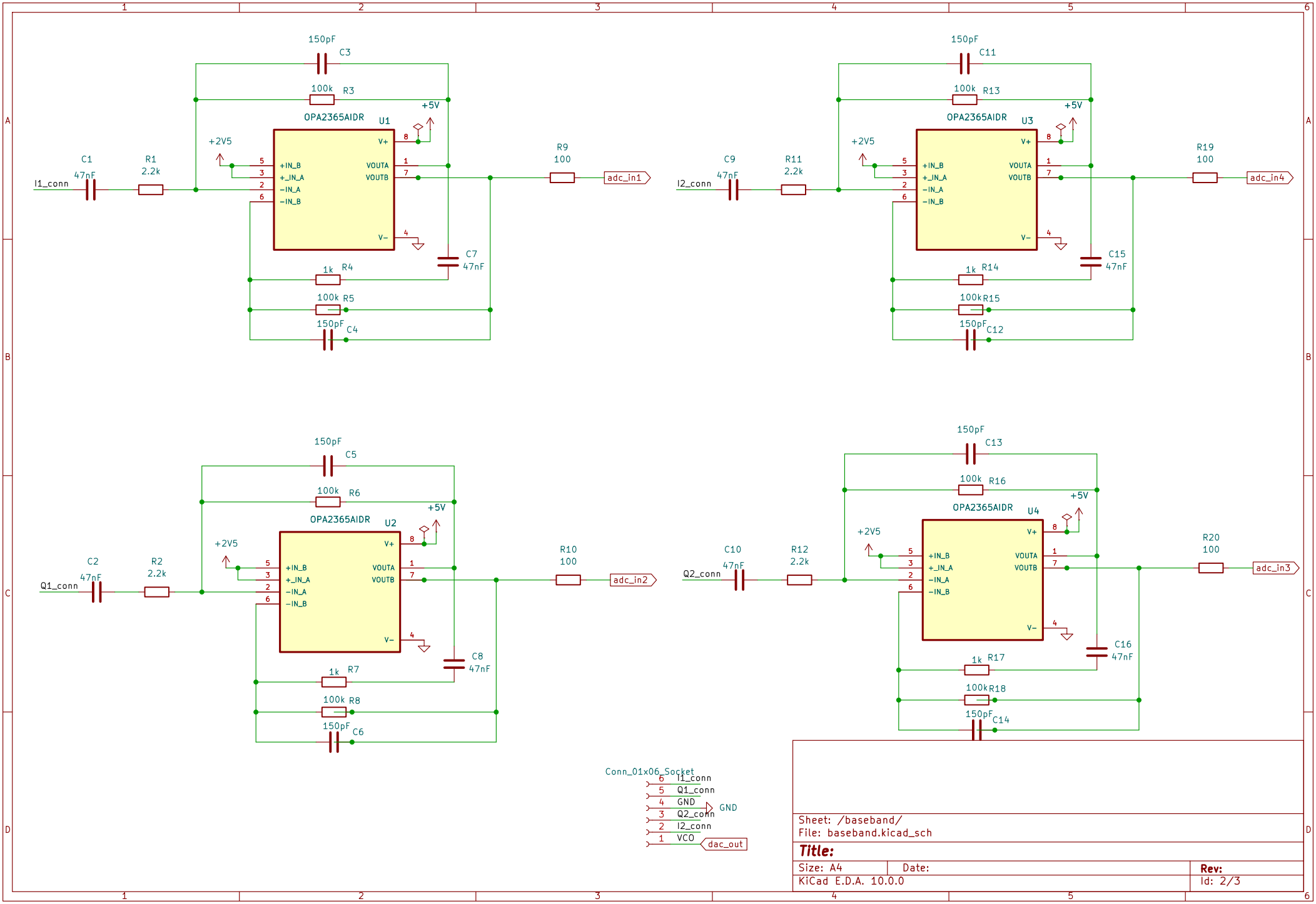
150pF
C3
100k
R3
+5V
OPA2365AIDR
U1
+2V5
C1
47nF
R1
2.2k
I1_conn
+IN_B
+_IN_A
−IN_A
−IN_B
V+
VOUTA
VOUTB
V−
R9
100
adc_in1
C7
47nF
1k
R4
100k
R5
150pF
C4
150pF
C11
100k
R13
+5V
OPA2365AIDR
U3
+2V5
C9
47nF
R11
2.2k
I2_conn
R19
100
adc_in4
C15
47nF
1k
R14
100k
R15
150pF
C12
150pF
C5
100k
R6
+5V
OPA2365AIDR
U2
+2V5
C2
47nF
R2
2.2k
Q1_conn
R10
100
adc_in2
C8
47nF
1k
R7
100k
R8
150pF
C6
150pF
C13
100k
R16
+5V
OPA2365AIDR
U4
+2V5
C10
47nF
R12
2.2k
Q2_conn
R20
100
adc_in3
C16
47nF
1k
R17
100k
R18
150pF
C14
Conn_01x06_Socket
6 I1_conn
5 Q1_conn
4 GND
3 Q2_conn
2 I2_conn
1 VCO
GND
dac_out
Sheet: /baseband/
File: baseband.kicad_sch
Title:
Size: A4
Date:
Rev:
KiCad E.D.A. 10.0.0
Id: 2/3

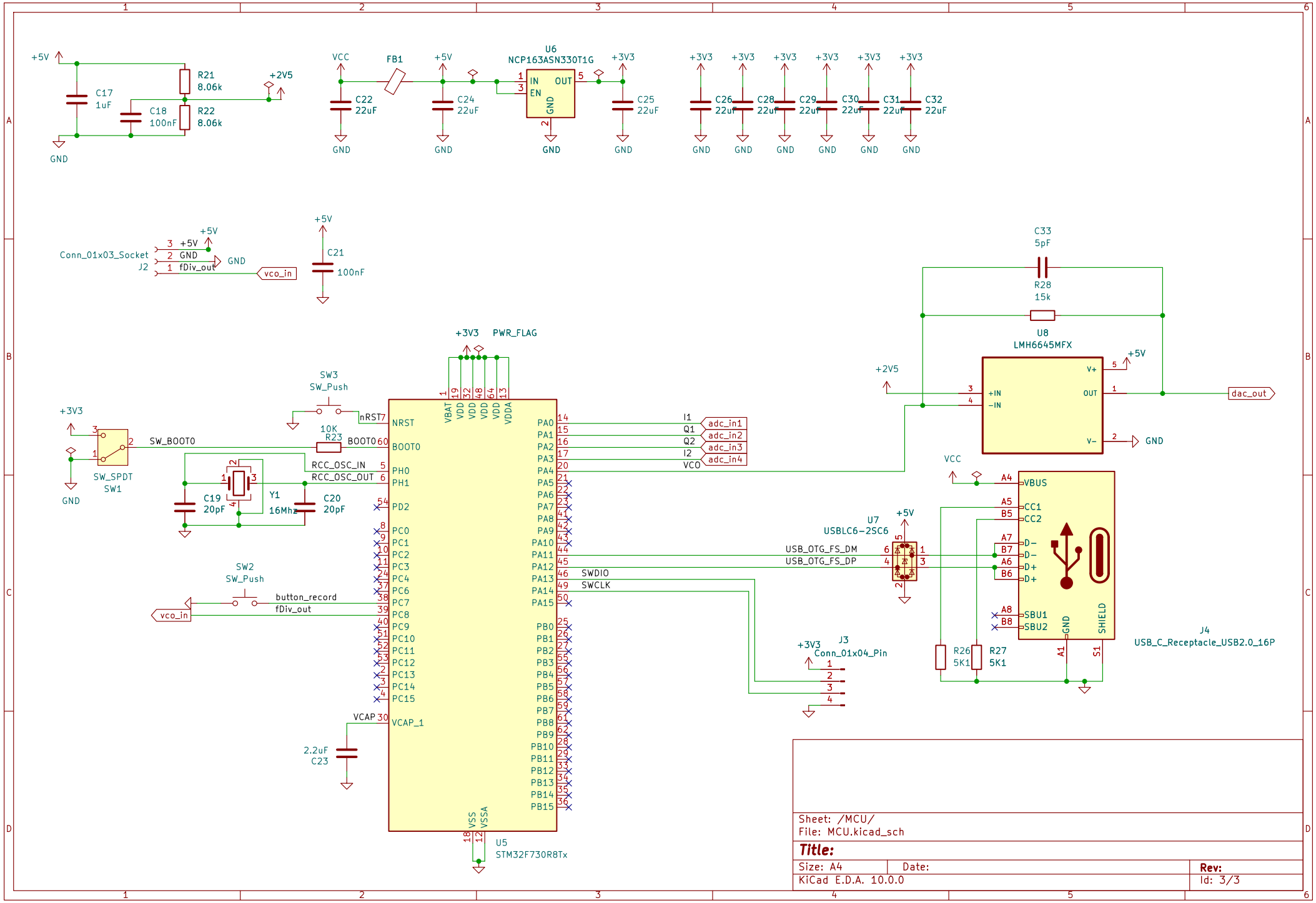

Sheet: /MCU/
File: MCU.kicad_sch

Title:

Size: A4	Date:	Rev:
KiCad E.D.A. 10.0.0		Id: 3/3